FILE: 2016-D02\ULO

REV	E.C.N NO.	CONTENT	CHK	DATE
V0.0		初做成	ZCP	

NOTES:

1. Rating: <UL> 300V/15A
   <IEC> 320V/15A
2. Poles:02-24P
3. Insulation Withstands Voltage: AC2000V/1 Min
5. Screw Torque Vlaue:0.4Nm
5. Insulation Resistance: 500MΩ at DC500V
6. Using Temperature Range: -40°C/+115°C
7. Suitable Electric Wire:14-26AWG(UL),0.2-1.5mm²(IEC);
8. Max soldering : +250° for 5S
9. RoHS Compliance.
10. With" ★ "is import dimension

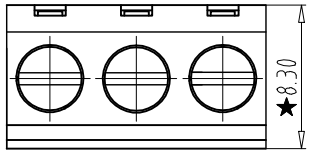

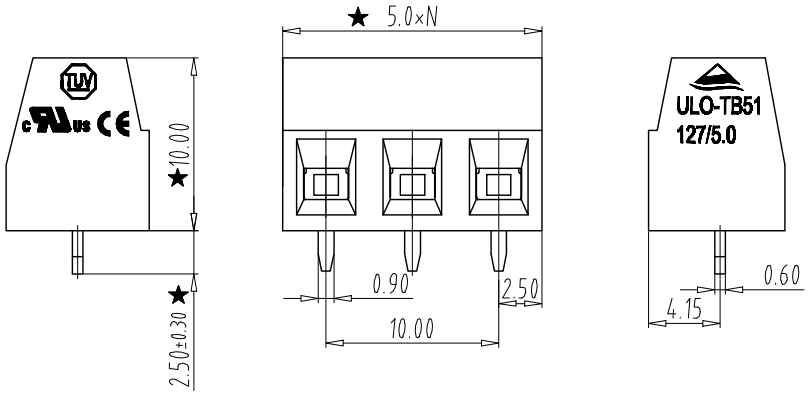

How to order

ULO-TB51 - 127/5.0 - XXP -Y 0 0 0A

- ULO-TB51: Certificate Series NO.
- 127/5.0: Factory Code
- XXP: poles
- Y: color:
  1:Grey
  2:Blue
  3:Black
  4:Green
  5:Orange
  6:Red
  7:transparent
  8:Yellow
  9:White
- 0 0 0A: Customer requirements

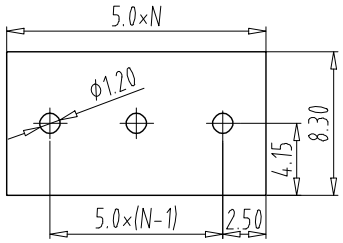

PCB LAYOUT

Total Pitch Tolerances in mm									Nominal dimension range in mm									⊥		≒	—		//
over 0 to 30	over 30 to 53	over 53 to 70	over 70 to 90	over 90 to 115	over 115 to 150	over 150 to 200	over 200 to 250	over 250 to 320	over 0 to 30	over 30 to 53	over 53 to 70	over 70 to 90	over 90 to 115	over 115 to 150	over 150 to 200	over 200 to 250	over 250 to 320	over 0 to 10	over 10	all	over 0 to 100	over 100 to 150	over 150
±0.18	±0.20	±0.25	±0.3	±0.35	±0.44	±0.55	±0.70	±0.75	±0.20	±0.25	±0.30	±0.35	±0.44	±0.55	±0.70	±0.80	±0.90	0.2	0.3	0.3	0.2	0.3	0.5

ITEM	NAME OF PART	NO. OF PART	Q"TY	MATERIAL	NOTE
4	SCREW	3060000012	2	STEEL	M2.5/Zn Plated
3	SOLDERPIN	3110000002	2	Brass	Tin Plated
2	BLOCK	3090000005	2	Brass	Ni Plated
1	Housing	4050000324	1	PA66	UL94V-0

DWG.		DATE	18.10.16	UNITS	MM	SHEET/OF	1/1
CHK.		DATE		SCALE	1:1	A4	
APP.	史文莉	DATE		NAME	ULO-TB51-127/5.0-XXP-Y000A		
	NINGBO ULO ELECTRONICS CO.,LTD. 宁波欧路电子有限公司			DWGNO.	ULOTB514013A		