FILE:	21.06.03

REV	E.C.N NO.	CONTENT	CHK	DATE

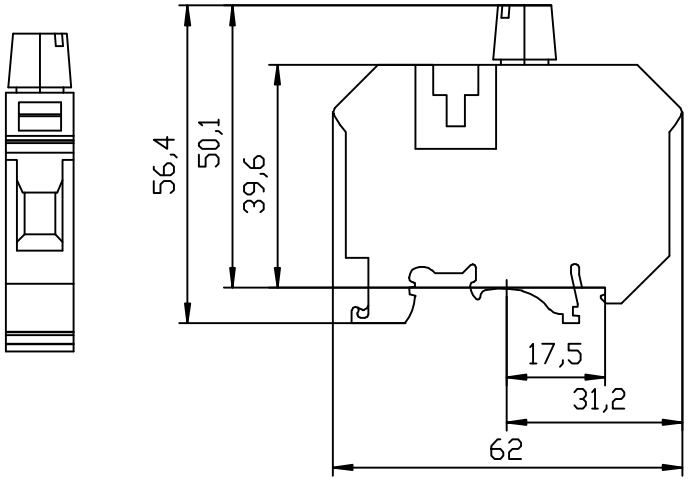

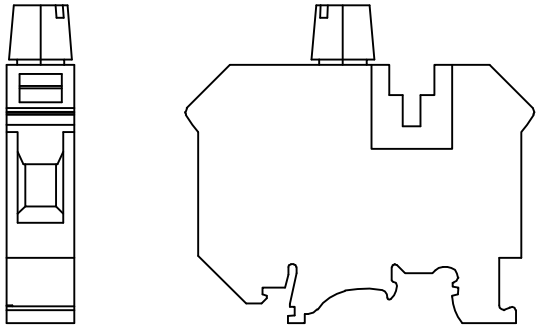

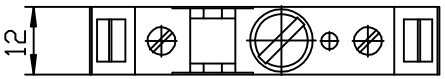

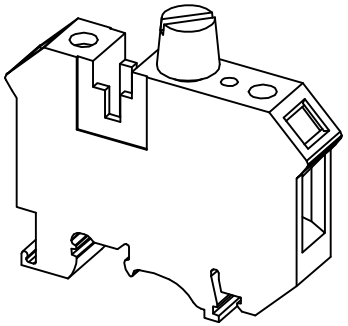

Technical data:

Product properties
1. Product type:Fuse terminal block
2. Number of positions: 1
3. Number of connections: 2
4. Number of rows: 1
5. Potentials: 1

Electrical properties
1. Nominal voltage: 500V/800V
2. Rated surge voltage: 4KV
3. Nominal current: 10A
4. Maximum load current: 10A
5. Nominal cross section: 1.5mm²
6. Overvoltage category: III
7. Degree of pollution: 3
8. Operating temperature range: /
9. Insulating material: PA
10. Flammability rating according to UL 94: V0

Connection data
1. Conductor cross section rigid: 0.5mm²-16mm²
2. Cross section AWG: 20-6
3. Conductor cross section flexible: 0.5mm²-16mm²
4. Conductor cross section, flexible AWG: 20-6
5. Stripping length: 11mm

Total Pitch Tolerances in mm									Nominal dimension range in mm									⊥		÷	—		//
over 0 to 30	over 30 to 53	over 53 to 70	over 70 to 90	over 90 to 115	over 115 to 150	over 150 to 200	over 200 to 250	over 250 to 320	over 0 to 30	over 30 to 53	over 53 to 70	over 70 to 90	over 90 to 115	over 115 to 150	over 150 to 200	over 200 to 250	over 250 to 320	over 0 to 10	over 10	all	over 0 to 100	over 100 to 150	over 150
±0.18	±0.20	±0.25	±0.3	±0.35	±0.44	±0.55	±0.70	±0.75	±0.20	±0.25	±0.30	±0.35	±0.44	±0.55	±0.70	±0.80	±0.90	0.2	0.3	0.3	0.2	0.3	0.5

ITEM	NAME OF PART		NO. OF PART	Q"TY	MATERIAL		NOTE
DWG.	SWL	DATE	24.1.12	UNITS	MM	SHEET/OF	1/1
CHK.		DATE		SCALE	1 : 1	A4	
APP.		DATE		NAME	ULO-TB140-UK 10-DREHSI(5X20)		
NINGBO ULO ELECTRONICS CO.,LTD. 宁波欧路电子有限公司				DWGNO.	X		