FILE: 2011-D02\TL02

| REV | E.C.N NO. | CONTENT | CHK | DATE |
|---|---|---|---|---|
| | | | | |

| 产品代号/Part NO. | 线径/Wire Diameter | | A | B | C |
|---|---|---|---|---|---|
| 表面镀银/Silver-plated | mm² | AWG | | | |
| ULO-CDSM-010-0.37 | 0.14-0.37 | 26-22 | 2.6 | 0.90 | 8 |
| ULO-CDSM-010-0.5 | 0.5 | 20 | 2.6 | 1.10 | 8 |
| ULO-CDSM-010-0.75 | 0.75 | 18 | 2.6 | 1.30 | 8 |
| ULO-CDSM-010-1.0 | 1.0 | 18 | 2.6 | 1.45 | 8 |
| ULO-CDSM-010-1.5 | 1.5 | 16 | 3.0 | 1.75 | 8 |
| ULO-CDSM-010-2.5 | 2.5 | 14 | 3.2 | 2.25 | 6 |

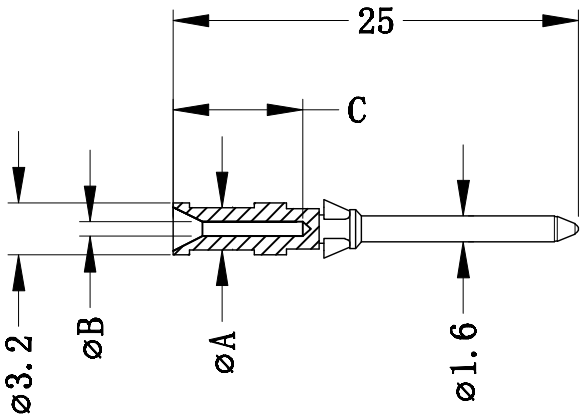


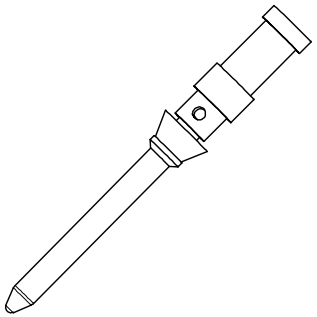

Technical specification:

1. Material:Copper alloy
2. Surface:hard-Silver plated
3. Rated Current:10A
4. Contact resistance:≤3mΩ
5. Wire gauge:0.14-2.5mm² (26-14AWG)
6. Mechanical working life(mating cyales):≥500

| ITEM | NAME OF PART | | NO. OF PART | Q"TY | MATERIAL | | NOTE |
|---|---|---|---|---|---|---|---|
| DWG. | SWL | DATE | 2023.12.19 | UNITS | MM | SHEET/OF | 1/1 |
| CHK. | | DATE | | SCALE | 1:1 | A4 | |
| APP. | | DATE | | NAME | ULO-CDSM-010-XX | | |
| NINGBO ULO ELECTRONICS CO.,LTD. 宁波欧路电子有限公司 | | | | DWGNO. | | | |