FILE: 2011-D02\TL02

REV	E.C.N NO.	CONTENT	CHK	DATE

产品代号/Part NO.	线径/Wire Diameter		A	B	C
表面镀金/Gold-plated	mm²	AWG			
ULO-CDGF-010-0.37	0.14-0.37	26-22	2.6	0.90	8
ULO-CDGF-010-0.5	0.5	20	2.6	1.10	8
ULO-CDGF-010-0.75	0.75	18	2.6	1.30	8
ULO-CDGF-010-1.0	1.0	18	2.6	1.45	8
ULO-CDGF-010-1.5	1.5	16	3.0	1.75	8
ULO-CDGF-010-2.5	2.5	14	3.2	2.25	6

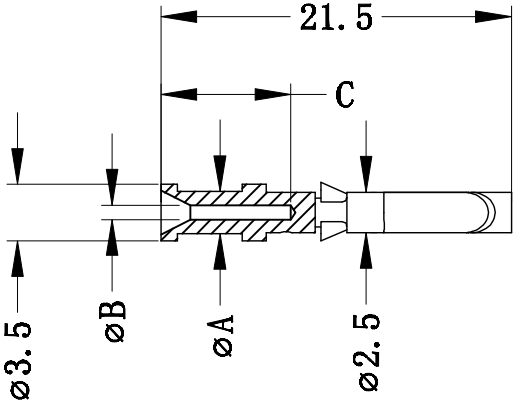

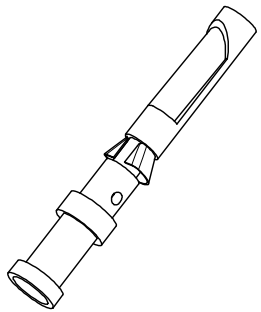

Technical specification:

1. Material:Copper alloy
2. Surface:hard-Gold plated
3. Rated Current:10A
4. Contact resistance:≤3mΩ
5. Wire gauge:0.14-2.5mm² (26-14AWG)
6. Mechanical working life(mating cyales):≥500

ITEM	NAME OF PART		NO. OF PART	Q"TY	MATERIAL		NOTE
DWG.	SWL	DATE	2023.12.19	UNITS	MM	SHEET/OF	1/1
CHK.		DATE		SCALE	1:1	A4	
APP.		DATE		NAME	ULO-CDGF-010-XX		
NINGBO ULO ELECTRONICS CO.,LTD. 宁波欧路电子有限公司				DWGNO.			