FILE: 2021-D01\ULO

| REV | E.C.N NO. | CONTENT | CHK | DATE |
|---|---|---|---|---|
| | | | | |

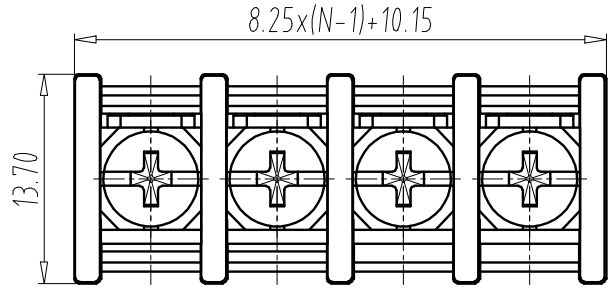


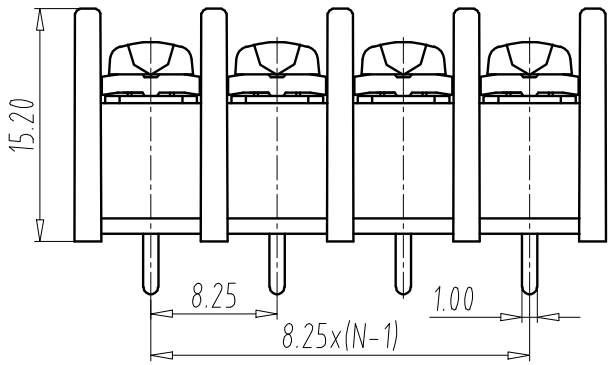


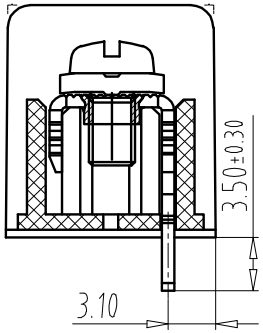


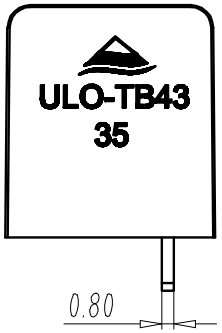


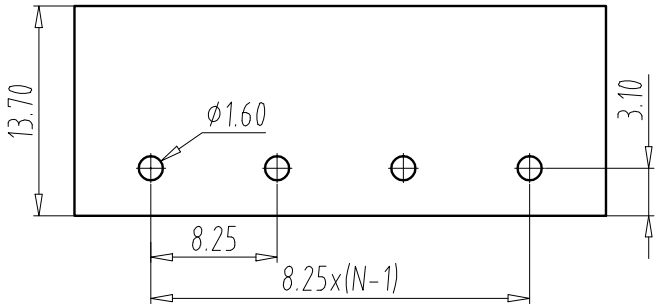


NOTES1:

UL Standard

1.

| Use group | B | C | D |
|---|---|---|---|
| Rated Current | 20A | – | 10A |
| Rated Voltage | 300V | – | 300V |

2.Wire range: 12～22AWG

IEC Standard

1.

| | |
|---|---|
| Pollution Degree | 2 |
| Overvoltage Category | Ⅱ |
| Rate Impulse Voltage(KV) | 6.0KV |
| Rate Voltage(V) | 320V |
| Rate Current(A) | 24A |

2.Wire range: 0.5-2.5mm$^2$

NOTES2:

1.Housing: PA66(UL94V-0)
2.Screw: Steel(M3/Ni Plated)
3.Solder Pin: Brass(Tin Plated)

NOTES3:

1.Pitch: 8.25mm Poles: 02-24P
2.Operating temperature: -40℃～+105℃
3.RoHS Compliance

How to order

ULO-TB43 - 35S/B - XXP - Y 1 0 0 A

Certificate Series NO. | Factory Code | poles | Customer requirements

color:

| | |
|---|---|
| 1:Grey | 6:Red |
| 2:Blue | 7:transparent |
| 3:Black | 8:Yellow |
| 4:Green | 9:White |
| 5:Orange | |

| Total Pitch Tolerances in mm | | | | | | | | | Nominal dimension range in mm | | | | | | | | | ⊥ | | ⌭ | — | | // |
|---|---|---|---|---|---|---|---|---|---|---|---|---|---|---|---|---|---|---|---|---|---|---|---|
| over 0 to 30 | over 30 to 53 | over 53 to 70 | over 70 to 90 | over 90 to 115 | over 115 to 150 | over 150 to 200 | over 200 to 250 | over 250 to 320 | over 0 to 30 | over 30 to 53 | over 53 to 70 | over 70 to 90 | over 90 to 115 | over 115 to 150 | over 150 to 200 | over 200 to 250 | over 250 to 320 | over 0 to 10 | over 10 | all | over 0 to 100 | over 100 to 150 | over 150 |
| ±0.18 | ±0.20 | ±0.25 | ±0.3 | ±0.35 | ±0.44 | ±0.55 | ±0.70 | ±0.75 | ±0.20 | ±0.25 | ±0.30 | ±0.35 | ±0.44 | ±0.55 | ±0.70 | ±0.80 | ±0.90 | 0.2 | 0.3 | 0.3 | 0.2 | 0.3 | 0.5 |

| ITEM | NAME OF PART | | NO. OF PART | Q"TY | MATERIAL | | NOTE |
|---|---|---|---|---|---|---|---|
| DWG. | LZW | DATE | 21.06.15 | UNITS | MM | SHEET/OF | 1/1 |
| CHK. | | DATE | | SCALE | 1 : 1 | A4 | |
| APP. | | DATE | | NAME | ULO-TB43-35S/B-XXP-Y100A | | |
| NINGBO ULO ELECTRONICS CO.,LTD. 宁波欧路电子有限公司 | | | | DWGNO. | ULOTB43Y100A | | |