FILE:	2021-D01\ULO

REV	E.C.N NO.	CONTENT	CHK	DATE

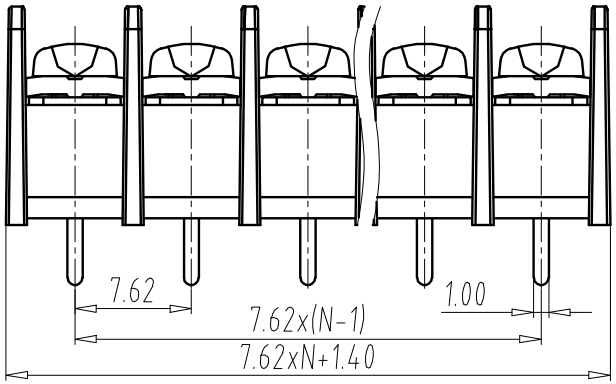

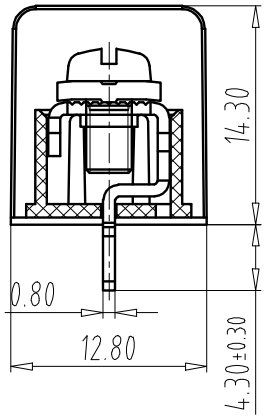

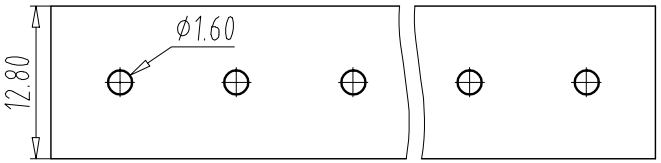

NOTES1:

UL Standard

1.

Use group	B	C	D
Rated Current	15A	15A	10A
Rated Voltage	300V	300V	300V

2.Wire range: 14～22AWG

IEC Standard

1.

Pollution Degree	2
Overvoltage Category	Ⅲ
Rate Impulse Voltage(KV)	6.0KV
Rate Voltage(V)	320V
Rate Current(A)	24A

2.Wire range: 0.5-2.5mm²

NOTES2:

1.Housing: PA66(UL94V-0)

2.Screw: Steel(M3/Ni Plated)

3.Solder Pin: Brass(Tin Plated)

NOTES3:

1.Pitch: 7.62mm Poles: 02-24P

2.Operating temperature: -40℃～+105℃

3.RoHS Compliance

How to order

ULO-TB44 - 25C/B - XXP - Y 100A

- ULO-TB44: Certificate Series NO.
- 25C/B: Factory Code
- XXP: poles
- Y 100A: Customer requirements
- Y: color:
  - 1:Grey
  - 2:Blue
  - 3:Black
  - 4:Green
  - 5:Orange
  - 6:Red
  - 7:transparent
  - 8:Yellow
  - 9:White

Total Pitch Tolerances in mm									Nominal dimension range in mm									⊥		÷	—		//
over 0 to 30	over 30 to 53	over 53 to 70	over 70 to 90	over 90 to 115	over 115 to 150	over 150 to 200	over 200 to 250	over 250 to 320	over 0 to 30	over 30 to 53	over 53 to 70	over 70 to 90	over 90 to 115	over 115 to 150	over 150 to 200	over 200 to 250	over 250 to 320	over 0 to 10	over 10	all	over 0 to 100	over 100 to 150	over 150
±0.18	±0.20	±0.25	±0.3	±0.35	±0.44	±0.55	±0.70	±0.75	±0.20	±0.25	±0.30	±0.35	±0.44	±0.55	±0.70	±0.80	±0.90	0.2	0.3	0.3	0.2	0.3	0.5

ITEM	NAME OF PART		NO. OF PART	Q"TY	MATERIAL		NOTE
DWG.	LZW	DATE	21.06.15	UNITS	MM	SHEET/OF	1/1
CHK.		DATE		SCALE	1 : 1	A4	
APP.		DATE		NAME	ULO-TB44-25C/B-XXP-Y100A		
NINGBO ULO ELECTRONICS CO.,LTD. 宁波欧路电子有限公司				DWGNO.	ULOTB44Y100A		