| FILE: | 2021-D01\ULO |
|---|---|

| REV | E.C.N NO. | CONTENT | CHK | DATE |
|---|---|---|---|---|
| | | | | |

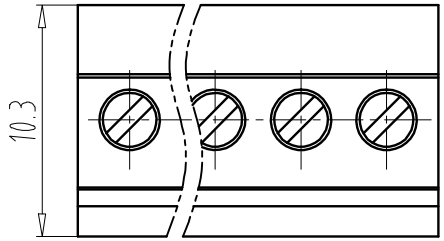


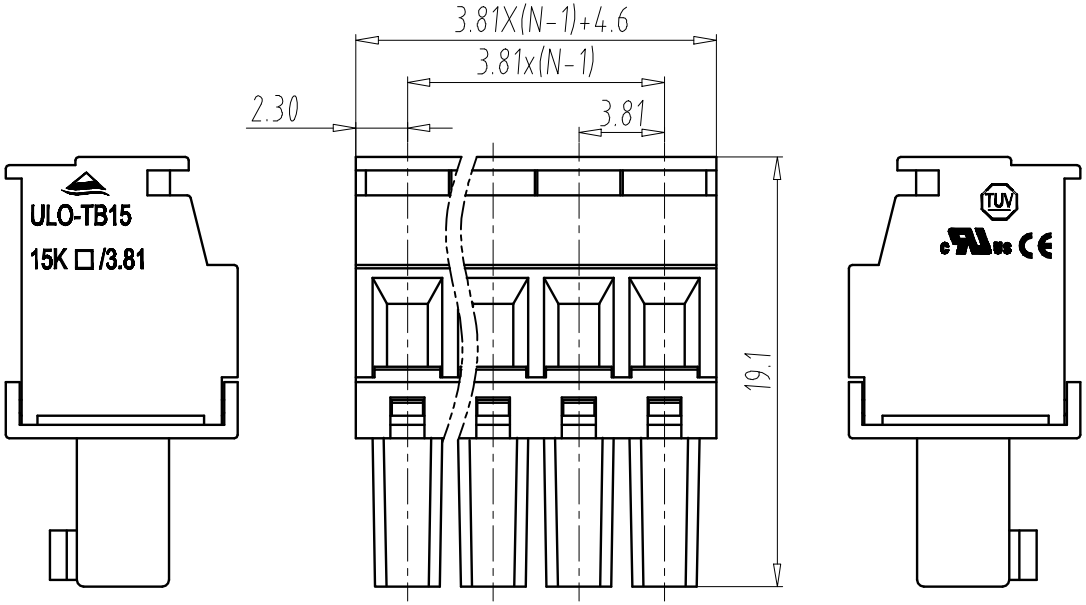


NOTES1:

UL Standard

1. Rating voltage/current: 300V/8A
2. Wire range: 16～28AWG
3. Torque value: M2.5,3.54Lb.in

IEC Standard

1.

| | |
|---|---|
| Pollution Degree | 2 |
| Overvoltage Category | II |
| Rate Impulse Voltage(KV) | 2.5KV |
| Rate Voltage(V) | 250V |
| Rate Current(A) | 7A |

2. wire range: 0.5-1.5mm²
3. Torque value: M2.5, 0.4Nm

NOTES2:

1. Housing: PA66(UL94V-0)
2. Conductor: Brass(Sn Plated)
3. Spring: Stainless Steel
4. Screw: Steel(M2.5,Zn Plated)

NOTES3:

1. Pitch: 3.81mm Poles: 02-24P
2. Stripping length: 7mm
3. Operating temperature: -40℃～+105℃
4. RoHS Compliance

How to order

ULO-TB15 - 15KB/3.81 - XXP - Y 0 0 0 A

- ULO-TB15: Certificate Series NO.
- 15KB/3.81: Factory Code
- XXP: poles
- Y 0 0 0 A: Customer requirements
  - color:
    - 1:Grey
    - 2:Blue
    - 3:Black
    - 4:Green
    - 5:Orange
    - 6:Red
    - 7:transparent
    - 8:Yellow
    - 9:White

| Total Pitch Tolerances in mm | | | | | | | | | Nominal dimension range in mm | | | | | | | | | ⊥ | | ⌭ | — | | // |
|---|---|---|---|---|---|---|---|---|---|---|---|---|---|---|---|---|---|---|---|---|---|---|---|
| over 0 to 30 | over 30 to 53 | over 53 to 70 | over 70 to 90 | over 90 to 115 | over 115 to 150 | over 150 to 200 | over 200 to 250 | over 250 to 320 | over 0 to 30 | over 30 to 53 | over 53 to 70 | over 70 to 90 | over 90 to 115 | over 115 to 150 | over 150 to 200 | over 200 to 250 | over 250 to 320 | over 0 to 10 | over 10 | all | over 0 to 100 | over 100 to 150 | over 150 |
| ±0.18 | ±0.20 | ±0.25 | ±0.3 | ±0.35 | ±0.44 | ±0.55 | ±0.70 | ±0.75 | ±0.20 | ±0.25 | ±0.30 | ±0.35 | ±0.44 | ±0.55 | ±0.70 | ±0.80 | ±0.90 | 0.2 | 0.3 | 0.3 | 0.2 | 0.3 | 0.5 |

| ITEM | NAME OF PART | | NO. OF PART | Q"TY | MATERIAL | | NOTE |
|---|---|---|---|---|---|---|---|
| DWG. | lzw | DATE | 21.04.27 | UNITS | MM | SHEET/OF | 1/1 |
| CHK. | | DATE | | SCALE | 1 : 1 | A4 | |
| APP. | | DATE | | NAME | ULO-TB15-15KB/3.81-XXP-Y000A | | |
| NINGBO ULO ELECTRONICS CO.,LTD. 宁波欧路电子有限公司 | | | | DWGNO. | ULOTB15Y000A | | |