| FILE: | 2021-D01\ULO |
|---|---|

| REV | E.C.N NO. | CONTENT | CHK | DATE |
|---|---|---|---|---|
| | | | | |

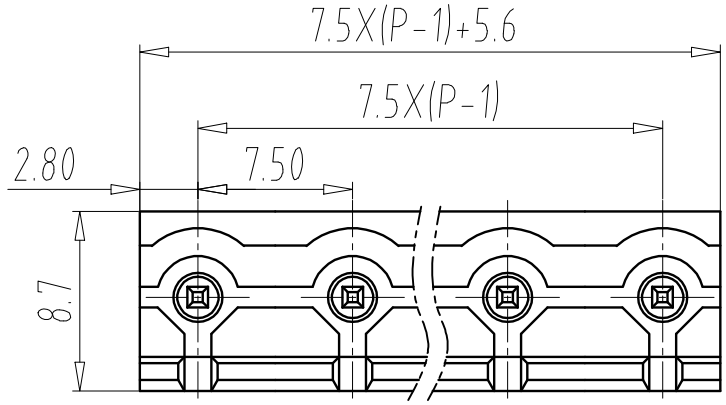


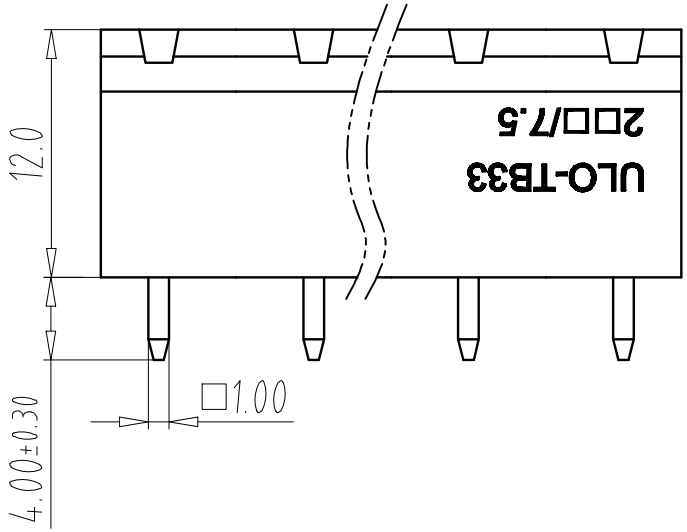


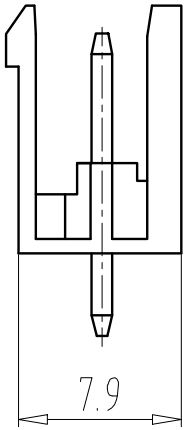


NOTES1:

UL Standard

1.

| Use group | B | C | D |
|---|---|---|---|
| Rated Current | 15A | – | 10A |
| Rated Voltage | 300V | – | 300V |

IEC Standard

1.

| | |
|---|---|
| Pollution Degree | 2 |
| Overvoltage Category | Ⅲ |
| Rate Impulse Voltage(KV) | 4.0KV |
| Rate Voltage(V) | 400V |
| Rate Current(A) | 20A |

NOTES2:

1.Housing: PA66 (UL94V-0)

2.Solder Pin: Brass (Sn Plated)

NOTES3:

1.Pitch: 7.5mm Poles: 02-24P

2.Operating temperature: -40℃～+105℃

3.Stripping length: 7-8mm

4.RoHS Compliance

How to order

ULO-TB33 - 2V/7.5 - XXP - Y 0 0 0A

Certificate Series NO. | Factory Code | poles | Customer requirements

color:

1:Grey 2:Blue 3:Black

4:Green 5:Orange 6:Red

7:transparent 8:Yellow 9:White

| Total Pitch Tolerances in mm | | | | | | | | | Nominal dimension range in mm | | | | | | | | | ⊥ | | ⌭ | — | | // |
|---|---|---|---|---|---|---|---|---|---|---|---|---|---|---|---|---|---|---|---|---|---|---|---|
| over 0 to 30 | over 30 to 53 | over 53 to 70 | over 70 to 90 | over 90 to 115 | over 115 to 150 | over 150 to 200 | over 200 to 250 | over 250 to 320 | over 0 to 30 | over 30 to 53 | over 53 to 70 | over 70 to 90 | over 90 to 115 | over 115 to 150 | over 150 to 200 | over 200 to 250 | over 250 to 320 | over 0 to 10 | over 10 | all | over 0 to 100 | over 100 to 150 | over 150 |
| ±0.18 | ±0.20 | ±0.25 | ±0.3 | ±0.35 | ±0.44 | ±0.55 | ±0.70 | ±0.75 | ±0.20 | ±0.25 | ±0.30 | ±0.35 | ±0.44 | ±0.55 | ±0.70 | ±0.80 | ±0.90 | 0.2 | 0.3 | 0.3 | 0.2 | 0.3 | 0.5 |

| ITEM | NAME OF PART | | NO. OF PART | Q"TY | MATERIAL | | NOTE |
|---|---|---|---|---|---|---|---|
| DWG. | LZW | DATE | 21.05.11 | UNITS | MM | SHEET/OF | 1/1 |
| CHK. | | DATE | | SCALE | 1:1 | A4 | |
| APP. | | DATE | | NAME | ULO-TB33-2V/7.5-XXP-Y000A | | |
| NINGBO ULO ELECTRONICS CO.,LTD. 宁波欧路电子有限公司 | | | | DWGNO. | ULOTB33Y000A | | |